Newmans®

Trinity Series
Triple Offset Butterfly Valves

Size: 3” thru 120”
Class: 150 thru 600
Design: Flanged, Lug, Wafer & Butt-weld

www.newmans.it

Trinity by Newco

Table of Contents

Newmans Company Information

Profile

Newmans is recognized as a global valve manufacturing company providing product to the market on a world-wide basis. The NEWCO, OIC and COOPER trademarks are recognized and respected the world over for their high quality and ability to meet the industry's most exacting standards. Newmans manufactures and markets one of the industry's broadest product lines suitable for most applications and market segments. Newmans is fully committed to engineering excellence and product innovation supported by a highly qualified technical engineering staff. Superior customer service is backed by the inventories of finished valves shipped daily from the nine strategic global locations.

Mission

It is our goal to be known and respected in the Industry as "The Reliable Valve Source" for our extensive knowledge and superior service. Measured by keeping our word, we will deliver quality products on time at a fair value. We achieve the above dealing with integrity in an open and flexible environment allowing people access to valuable information to make good and timely decisions. We believe that all this can be accomplished yielding great rewards for all involved while maintaining a balance in life.

Overview

- *Newco, OIC, & Cooper brands*
- *Gate, Globe, Check, Ball, & Triple Offset valves*
- *Sizes from 1/4" thru 120"*
- *ANSI Class 150 thru 4500 lbs.*
- *ASME, API, & MSS*
- *Carbon, Stainless, Duplex, Super Duplex, Monel, Noble & other Alloys*
- *Oil & Gas, chemical, power, pulp & paper, marine, & industrial*
- *In-house modifications & actuation for special applications*

Timeline

1936: Founded in Tulsa, OK

1946: Incorporated the Newmans name. Focused on PVF industry until acquired Jordan Group in 1989

1957: Opened Houston,TX branch 1963: Entered into the international valve market

1970: Opened New Brunswick, New Jersey branch

1976: Newmans opened its Canadian branch under the name of Newmans Valve Limited

1984: Precision Actuation Services (PAS) was opened to perform modification & actuation services

1996: Precision Castparts Corporation (PCC) acquired Newmans

1997: Newmans acquired "OIC" brand

2003: Newmans was purchased by current partners including original owners

2004: Opened Carson, CA branch

2005: Newco Valves, L.P., purchased Cooper Valves from Dresser, Inc.

2006: Opened Shanghai, China branch

2007: Completed two foundries, two process centers, & one ball valve facility in China. Opened Italy office

2008: Opened Atlanta, GA branch, Chicago, Ill. sales office, formed joint venture for the Trinity Series TOV

2009: Opened Stafford, TX Corporate Office/Projects branch, acquired Keamy Eng. & The Valve Connection in Australia

Features & Benefits

Sizes: 3” thru 120” - DN: 80 thru 3000 - ASME 150, 300, & 600 - PN16, 25, 40, & 100

Newmans Triple Offset Valves feature standard Stellite body seats, robust laminated disc seals, and unique graphite stem bearing seals for exceptional service life.

- Triple Offset Design for Bi-directional Bubble Tight Shutoff
- Self Centering Disc
- Sealed Bearing Design
- Stellite Body Seat Standard
- Blowout Proof Stem Option
- Firesafe Tested to API 607 Revision 5
- Available in a Wide Range of Materials and Configurations
  - WCB
  - 316 Stainless Steel
  - Monel
  - Hastelloy
  - Nickel - Aluminum - Bronze
  - Duplex

Time Tested Performance from the Quality Valve Supplier

Newmans Triple Offset Valves are designed, manufactured and supplied from world class facilities serving the industrial processing, transmission, water treatment and power industries across the globe. Trinity Triple Offset Valves offer dependable, economical service for all applications that require proven performance and quality.

Superior Features come Together for Superior Service

Featuring the premium Triple Offset design, the Newmans TOV is a zero leakage valve in both directions utilizing a Stellite/316 SS metal seating surface carefully matched to provide superior sealing. The Triple Offset design uses three separate geometries of disc/stem orientation and rotation to accomplish bubble tight sealing. The proven conical seating feature allows Newmans Triple Offset Valve to operate with minimal torque, increased temperatures and longer life cycle. The disc and body seat engage with no rubbing of the seating components.

Our Commitment is to Your Success

The Newmans Triple Offset Valve meets or exceeds industry standards and is available in a wide range of pressures, materials and body configurations. Once again Newmans Valve is offering superior value and performance to our global customers. Contact your Newmans representative for more information on the new Triple Offset Valve Product line.”

Sealing Principle of the Trinity Series TOV

Offset # 1 - The sealing plane is moved forward of the centerline of the shaft to provide full 360 degree interrupted sealing. This offset was initially introduced as standard with the introduction of the high performance butterfly valve.

Offset #2 - The centerline of disc rotation was moved laterally from the centerline of the shaft. This provided eccentric rotation of the disc which swung the seal ring completely off the seat upon opening. This also was introduced as standard on the high performance butterfly valves.

Offset #3 - The centerline of the seat cone angle. This angle is identical to the cone angle of the laminated seal ring on the disc. Additionally the point of the centerline of cone rotation is moved laterally from the centerline of disc rotation. As stated the point of cone angle of the laminated seal ring on the disc does not used this offset for the placement of the cone angle.

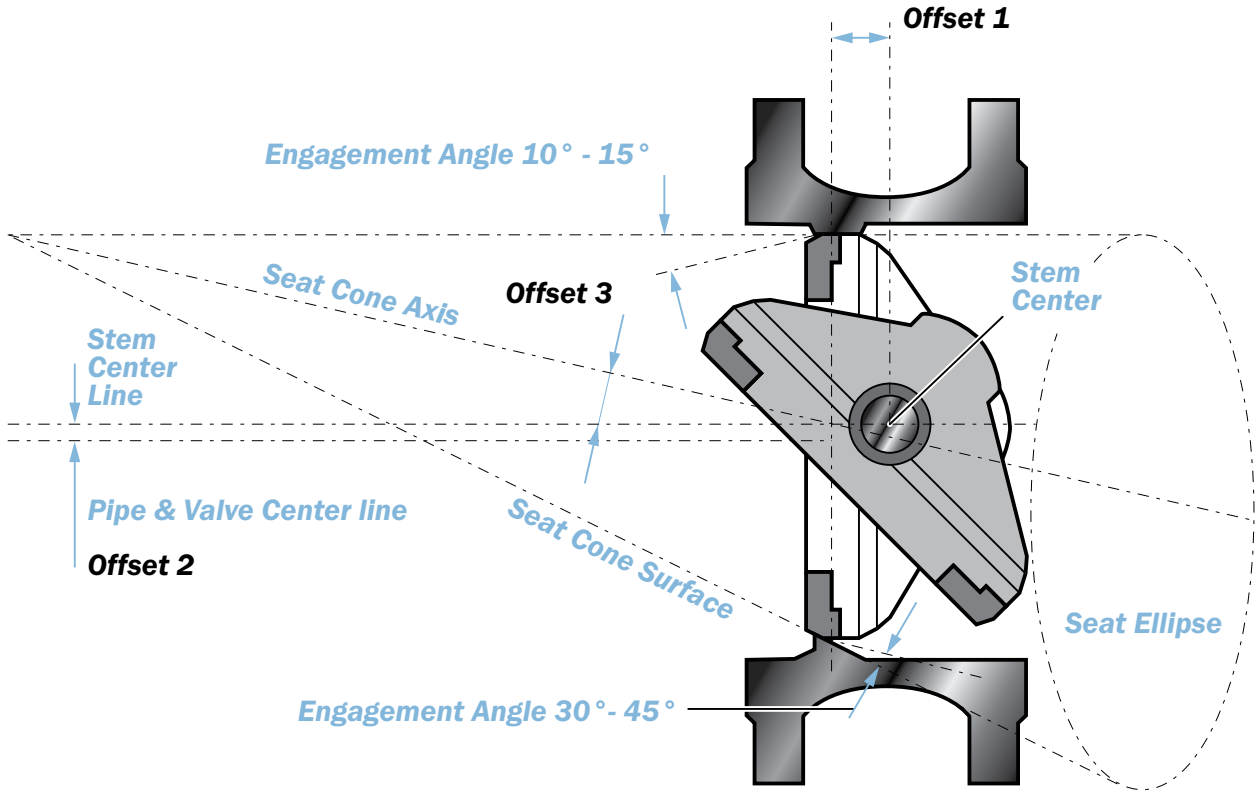

Materials of Construction

Standard Cast Steel & Stainless Steel Valve Assemblies

Assy No.	Component	Carbon Steel Assembly	Stainless Steel Assembly
1	Screw	A193 B8M Class 1	A193 B8M Class 1
2	Body*	A216 Gr. WCB	A351 Gr. CF8M
3	Bottom Cap	A105	316 Sst
4	Shaft Bearing	316 SST/Nitrited	316 SST/Nitrited
5	Disc	A216 Gr. WCB	A351 Gr.Cf8m
6	Pin	17-4ph Cond. H1150D	17-4ph Cond. H1150D
7	Bearing Seal	Graphite	Graphite
8	Shaft Bearing	316 SST/Nitrited	316 SST/Nitrited
9	Bearing Seal	Graphite	Graphite
10	Packing Stud	A193 B8m Class 1	A193 B8m Class 1
11	Hex Nut	A194 8m	A194 8m
12	Yoke	A216 Gr. WCB	A216 Gr. WCB
13	Key	1045	1045
14	Manual Gear	Mfr Std	Mfr Std
15	Gear Stud	A193 B7	A193 B7
16	Hex Nut	A194 2h	A194 2h
17	Yoke Stud	A193 B7	A193 B7
18	Hex Nut	A194 2h	A194 8m
19	Gland Follower	A216 Gr. WCB	A216 Gr. WCB
20	Packing Gland	316 SST	ST
21	Shaft Packing	Graphite	Graphite
22	Shaft	17-4ph Cond. H1150D	17-4ph Cond. H1150D
23	Split Ring	316 SST	316 SST
24	Gasket Ring	316 SST/Graphite	316 SST/Graphite
25	Seal Ring	316 SST/Graphite	316 SST/Graphite
26	Retainer	A105	316 SST
27	Retainer Screw	A193 B8m Class 1	A193 B8m Class 1
*Stellite seat overlay in valve body			

Shaft Packing

The stem packing top and bottom end rings are an interlaced, braided, graphite filament with a non-metallic inorganic passivating corrosion inhibitor. The middle rings of the packing set shall a compressed flexible graphite material.

Valve End Facing

All valve end faces shall be standard 1/16”raised face for class 150 and 300 valves per ANSI B16.5

Certifications

a. **Certified material test reports with traceability by a heat number are provided for each valve body, cap, disc and shaft.**

b. **A certificate of compliance is provided for each valve assembly certifying compliance with the applicable purchase order requirements and to the design standards and testing noted herein.**

When requested on the purchase order a certified shell and seat leakage test report shall also be included in the document package.

1. Basic Design Standards

a. In addition to the specific industry standard noted herein as a minimum the valve design will meet the applicable requirements of the following industry standards.

i. ASME B16.34 including the pressure / temperature ratings for valve body, disc and bottom cap materials: valve body minimum wall dimensions: nondestructive examination and markings.

ii. API STD 609 including basic design requirements applicable to Category B HP Butterfly Valves.

iii. API STD 598 including hydrostatic shell and hydrostatic and pneumatic seat testing.

iv. API STD 607, latest edition for fire testing.

v. MSS –SP- 55 for visual inspection of cast valve body, disc and bottom cap.

vi. ASME B16.5 for mating pipe flange dimensions for valve sizes 3” through 24”Class 150 & 300.

vii. ASME B16.47 for series B mating pipe flange dimensions for valve sizes 26” and larger Class 150 & 300.

viii. ISO-5752 Flange Dimension

2. Face-To-Face Dimensions

a. Lug Design – nominal dimension listed in API STD 609 Table 2 for category B valves.

b. Wafer Design – nominal dimension listed in API STD 609 Table 2 for category B valves.

c. Flanged (double flanged, short pattern) – nominal dimension in API STD 609, Table C and ISO 5752 basic series 13.

d. Flanged (double flanged, long pattern) – nominal dimension in API STD 609 , Table B and to Gate Valve Dimensions per ANSI 16.10 table A1 Column 7 for 150# valves and Table A2 Column 10 for 300# Valves

3. Seat Leakage Performance

a. Each valve exhibits the seat leakage performance as follows:

i. Preferred side (pressure entering the valve on the shaft side of the shut disc) - zero seat leakage at the low pressure and high pressure test. Each valve shall have an arrow on the external valve body indicating the direction of high pressure.

ii. Non preferred side (pressure entering the valve with the shaft on the opposite side of the shut disc) only – zero seat leakage at the low pressure closure test per API 598. High pressure closure test on application.

iii. Shell Test – Each unpainted valve assembly is hydrostatically shell tested in accordance with the applicable test requirements stated in API STD 598.

- Test Fluid – Filtered clean water (may contain a water- soluble oil or rust inhibitor). When testing austenitic stainless steel valves the chloride content does not exceed 100 parts per million.
- Test Leakage – No visually detectable leakage through the pressure boundary walls. Leakage through the adjustable shaft packing shall not be cause for rejection. However the packing must be able prevent any leakage at a test pressure equal to the 100ºF (38ºC) valve body rating.
- Standard Production Seat Leakage Test – Each production valve assembly, unless otherwise stated on the purchase order, shall be seat tested In accordance with the requirements listed in API STD 598, Table 1-A as follows:
- Test Leakage – Each valve tested shall exhibit zero leakage (no visible bubbles) for the duration of the test period.
- Fugitive Emissions Testing – Valves are capable of passing the fugitive emissions test requirements of ISO-15848-1.

Torque Values

Torque values for unlisted differential pressures are available upon request.

Class 150: DP PSI 50

Valve Size	Preferred Direction		Non-Preferred Direction	
	To Open In-Lbs	To Close In-Lbs	To Open In-Lbs	To Close In-Lbs
3”	305	283	272	589
4”	488	451	438	939
6”	725	617	569	1,342
8”	1,117	870	736	1,987
10”	1,602	1,134	977	2,736
12”	2,259	1,458	1,370	3,717
14”	3,821	2,581	1,830	6,402
16”	5,132	3,262	2,475	8,395
18”	7,525	4,877	3,288	12,402
20”	11,207	7,555	4,313	18,762
24”	16,891	10,664	6,927	27,555

Class 150: DP PSI 100

Valve Size	Preferred Direction		Non-Preferred Direction	
	To Open In-Lbs	To Close In-Lbs	To Open In-Lbs	To Close In-Lbs
3”	361	317	294	677
4”	577	501	475	1,078
6”	991	774	677	1,764
8”	1,743	1,251	983	2,994
10”	2,693	1,759	1,445	4,452
12”	3,948	2,347	2,171	6,294
14”	7,052	4,572	3,071	11,624
16”	9,659	5,920	4,344	15,579
18”	14,410	9,114	5,936	23,524
20”	21,755	14,450	7,965	36,205
24”	33,082	20,627	13,155	53,709

Class 150: DP PSI 150

Valve Size	Preferred Direction		Non-Preferred Direction	
	To Open In-Lbs	To Close In-Lbs	To Open In-Lbs	To Close In-Lbs
3”	416	350	317	766
4”	665	552	513	1,217
6”	1,256	930	786	2,187
8”	2,370	1,631	1,229	4,002
10”	3,785	2,383	1,912	6,168
12”	5,636	3,235	2,971	8,872
14”	10,283	6,562	4,311	16,845
16”	14,186	8,577	6,214	22,764
18”	21,295	13,351	8,584	34,646
20”	32,302	21,344	11,618	53,647
24”	49,273	30,591	19,382	79,864

Class 150: DP PSI 285

Valve Size	Preferred Direction		Non-Preferred Direction	
	To Open In-Lbs	To Close In-Lbs	To Open In-Lbs	To Close In-Lbs
3”	566	440	377	1,006
4”	904	689	614	1,593
6”	1,973	1,354	1,079	3,327
8”	4,062	2,659	1,894	6,721
10”	6,733	4,068	3,174	10,801
12”	10,196	5,634	5,132	15,830
14”	19,007	11,937	7,660	30,944
16”	26,410	15,752	11,262	42,162
18”	39,884	24,790	15,734	64,675
20”	60,781	39,960	21,481	100,741
24”	92,989	57,493	36,196	150,482

Torque Values (cont'd.)

Class 300: DP PSI 250

Valve Size	Preferred Direction		Non-Preferred Direction	
	To Open In-Lbs	To Close In-Lbs	To Open In-Lbs	To Close In-Lbs
3"	728	588	540	1,316
4"	924	702	683	1,626
6"	1,845	1,238	1,097	3,083
8"	3,726	2,349	1,887	6,075
10"	6,349	3,610	3,309	9,959
12"	9,328	4,967	4,951	14,296
14"	17,343	10,437	7,511	27,779
16"	25,103	13,784	11,959	38,887
18"	37,358	21,645	16,372	59,003
20"	56,249	34,884	22,065	91,133
24"	85,592	50,092	36,301	135,684

Class 300: DP PSI 500

Valve Size	Preferred Direction		Non-Preferred Direction	
	To Open In-Lbs	To Close In-Lbs	To Open In-Lbs	To Close In-Lbs
3"	1,055	776	679	1,832
4"	1,389	943	906	2,332
6"	3,200	1,985	1,704	5,185
8"	6,942	4,188	3,264	11,129
10"	12,128	6,650	6,048	18,777
12"	18,066	9,345	9,311	27,411
14"	34,080	20,269	14,416	54,349
16"	49,566	26,929	23,277	76,495
18"	74,055	42,631	32,085	116,686
20"	111,798	69,068	43,430	180,866
24"	170,385	99,383	71,801	269,768

Class 300: DP PSI 740

Valve Size	Preferred Direction		Non-Preferred Direction	
	To Open In-Lbs	To Close In-Lbs	To Open In-Lbs	To Close In-Lbs
3"	1,370	957	813	2,327
4"	1,835	1,176	1,119	3,010
6"	4,501	2,703	2,287	7,204
8"	10,029	5,953	4,586	15,982
10"	17,675	9,568	8,677	27,243
12"	26,455	13,547	13,498	40,002
14"	50,148	29,707	21,046	79,855
16"	73,050	39,547	34,143	112,598
18"	109,285	62,776	47,168	172,061
20"	165,125	101,885	63,940	267,010
24"	251,785	146,703	105,882	398,489

Class 600: DP PSI 500

Valve Size	Preferred Direction		Non-Preferred Direction	
	To Open In-Lbs	To Close In-Lbs	To Open In-Lbs	To Close In-Lbs
6"	3,769	2,044	2,325	5,813
8"	7,944	4,106	4,488	12,050
10"	13,603	6,358	7,894	19,961
12"	21,287	8,629	13,308	29,917
14"	39,524	18,751	21,473	58,276
16"	53,787	24,990	29,598	78,777
18"	79,940	40,063	40,677	120,003
20"	86,567	41,790	45,628	128,357
24"	106,068	47,641	59,326	153,709

Class 600: DP PSI 1000

Valve Size	Preferred Direction		Non-Preferred Direction	
	To Open In-Lbs	To Close In-Lbs	To Open In-Lbs	To Close In-Lbs
6"	6,938	3,489	4,050	10,427
8"	15,238	7,562	8,326	22,800
10"	26,555	12,067	15,138	38,622
12"	41,924	16,609	25,965	58,533
14"	78,349	36,802	42,246	115,151
16"	106,775	49,180	58,395	155,955
18"	159,079	79,326	80,553	238,406
20"	172,284	82,729	90,405	255,014
24"	211,235	94,382	117,753	305,617

Class 600: DP PSI 1480

Valve Size	Preferred Direction		Non-Preferred Direction	
	To Open In-Lbs	To Close In-Lbs	To Open In-Lbs	To Close In-Lbs
6"	9,981	4,875	5,706	14,856
8"	22,240	10,880	12,010	33,121
10"	38,990	17,547	22,093	56,536
12"	61,736	24,269	38,117	86,005
14"	115,620	54,131	62,189	169,752
16"	157,643	72,402	86,041	230,045
18"	235,053	117,019	118,835	352,072
20"	254,573	122,031	133,392	376,604
24"	312,196	139,254	173.842	451 450

Wafer Design Technical Data

Size: 3” thru 120”
Class: 150 thru 300

Valve Design: API 609
Flange Dimensions: ASME B16.5, B16.47 (Series A)
Tested in Accordance with: API 598

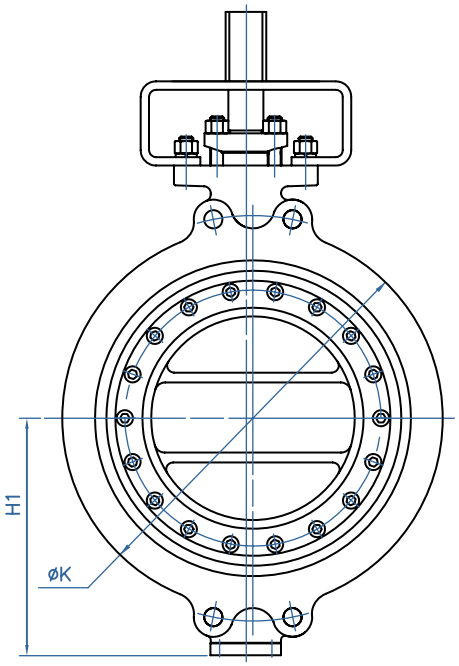

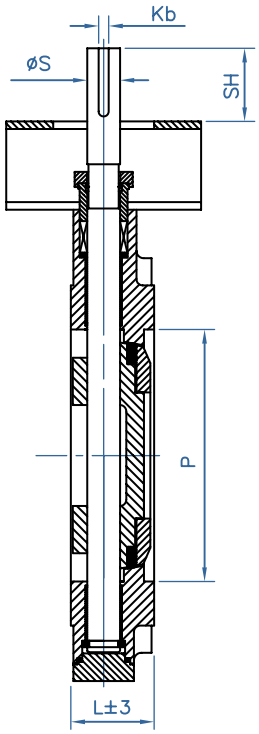

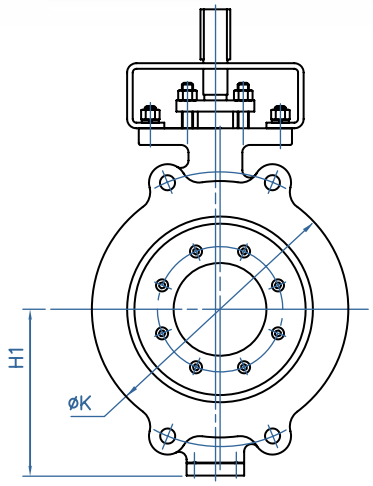

Class 150									
Size	P	L	K	H1	S	SH	Kb x Key	ISO Flg	Wgt
3	3.00	1.88	6.00	4.3	0.71	1.77	0.24 x 1	F07	11.0
4	4.00	2.13	7.50	5.1	0.71	1.77	0.24 x 1	F07	15.4
6	6.00	2.25	9.50	5.9	0.87	2.20	0.31 x 1	F10	24.2
8	8.00	2.50	11.75	7.5	1.02	2.20	0.31 x 1	F12	44.0
10	10.00	2.80	14.25	8.7	1.18	2.36	0.39 x 1	F12	63.8
12	12.00	3.18	17.00	10.2	1.42	2.76	0.47 x 1	F14	96.8
14	13.25	3.62	18.75	11.2	1.57	3.94	0.47 x 2	F16	138.6
16	15.25	4.00	21.25	12.6	1.77	3.94	0.47 x 2	F16	206.8
18	17.25	4.50	22.75	13.6	1.97	3.94	0.63 x 2	F16	308.0
20	19.25	5.00	25.00	15.2	2.17	4.33	0.71 x 2	F25	618.2
24	23.25	6.00	29.50	17.7	2.56	4.33	0.87 x 2	F30	924.0

Class 300									
Size	P	L	K	H1	S	SH	Kb x Key	ISO Flg	Wgt
3	3.00	1.88	6.00	4.7	0.71	1.77	6 x 1	F07	13.2
4	4.00	2.13	7.87	5.7	0.71	1.77	6 x 1	F07	17.6
6	6.00	2.32	10.63	7.1	1.02	2.20	8 x 1	F12	28.6
8	8.00	2.88	13.00	8.1	1.18	2.76	10 x 2	F14	55.0
10	10.00	3.25	15.25	9.4	1.42	2.76	12 x 2	F16	92.4
12	12.00	3.62	17.75	11.0	1.57	3.94	12 x 2	F16	107.8

Dimensional data on sizes and pressures not shown is available upon request.

Lug Design Technical Data

Size: 3” thru 120”
Class: 150 thru 300

Valve Design: API 609
Flange Dimensions: ASME B16.5, B16.47 (Series A)
Tested in Accordance with: API 598

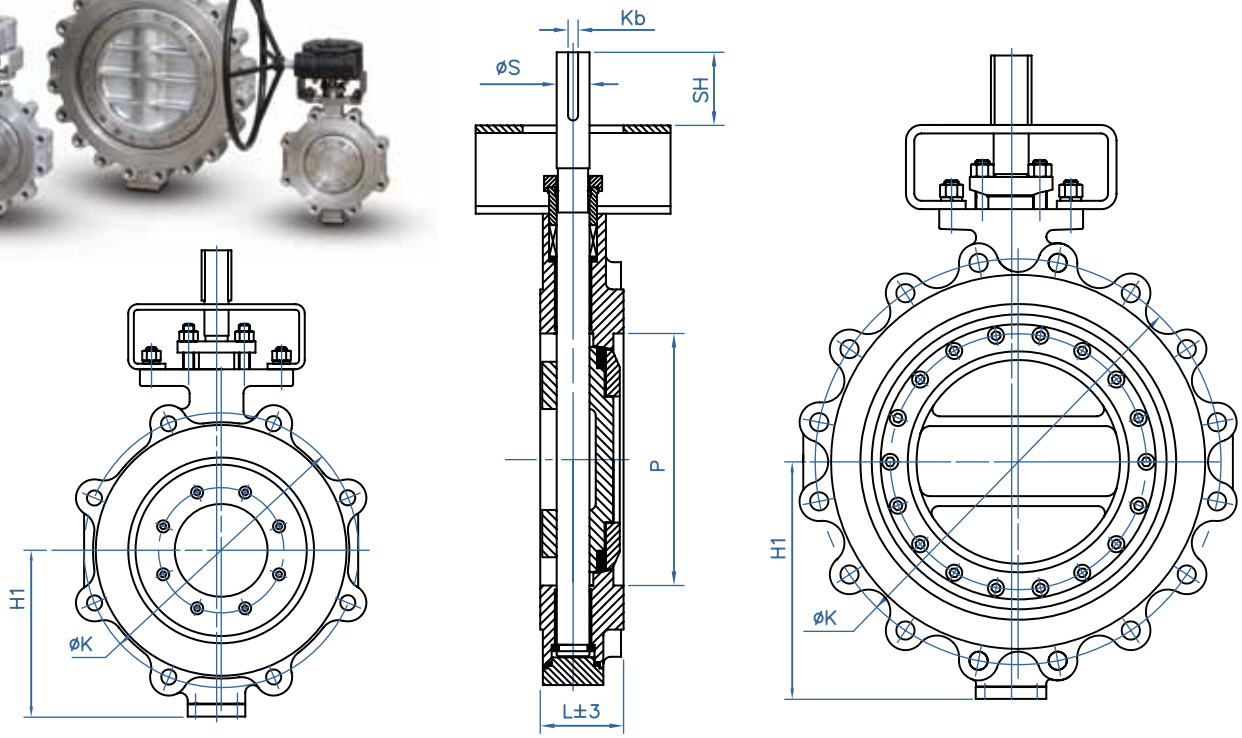

Class 150									
Size	P	L	K	H1	S	SH	Kb x Key	ISO Flg	Wgt
3	3.00	1.88	6.00	4.3	0.71	1.77	0.24 x 1	F07	28.6
4	4.00	2.13	7.50	5.1	0.71	1.77	0.24 x 1	F07	41.8
6	6.00	2.25	9.50	5.9	0.87	2.20	0.31 x 1	F10	66.0
8	8.00	2.50	11.75	7.5	1.02	2.20	0.31 x 1	F12	99.0
10	10.00	2.80	14.25	8.7	1.18	2.36	0.39 x 1	F12	143.0
12	12.00	3.18	17.00	10.2	1.42	2.76	0.47 x 1	F14	209.0
14	13.25	3.62	18.75	11.2	1.57	3.94	0.47 x 2	F16	319.0
16	15.25	4.00	21.25	12.6	1.77	3.94	0.47 x 2	F16	448.8
18	17.25	4.50	22.75	13.6	1.97	3.94	0.63 x 2	F16	574.2
20	19.25	5.00	25.00	15.2	2.17	4.33	0.71 x 2	F25	787.6
24	23.25	6.00	29.50	17.7	2.56	4.33	0.87 x 2	F30	1386.0

Class 300									
Size	P	L	K	H1	S	SH	Kb x Key	ISO Flg	Wgt
3	3.00	1.88	6.00	4.7	0.71	1.77	6 x 1	F07	35.2
4	4.00	2.13	7.87	5.7	0.71	1.77	6 x 1	F07	59.4
6	6.00	2.32	10.63	7.1	1.02	2.20	8 x 1	F12	88.0
8	8.00	2.88	13.00	8.1	1.18	2.76	10 x 2	F14	125.4
10	10.00	3.25	15.25	9.4	1.42	2.76	12 x 2	F16	187.0
12	12.00	3.62	17.75	11.0	1.57	3.94	12 x 2	F16	270.6

Dimensional data on sizes and pressures not shown is available upon request.

Short Pattern Design Technical Data

Size: 3” thru 120”
Class: 150 thru 300

Valve Design: API 609
Flange Dimensions: ASME B16.5, B16.47 (Series A)
Tested in Accordance with: API 598

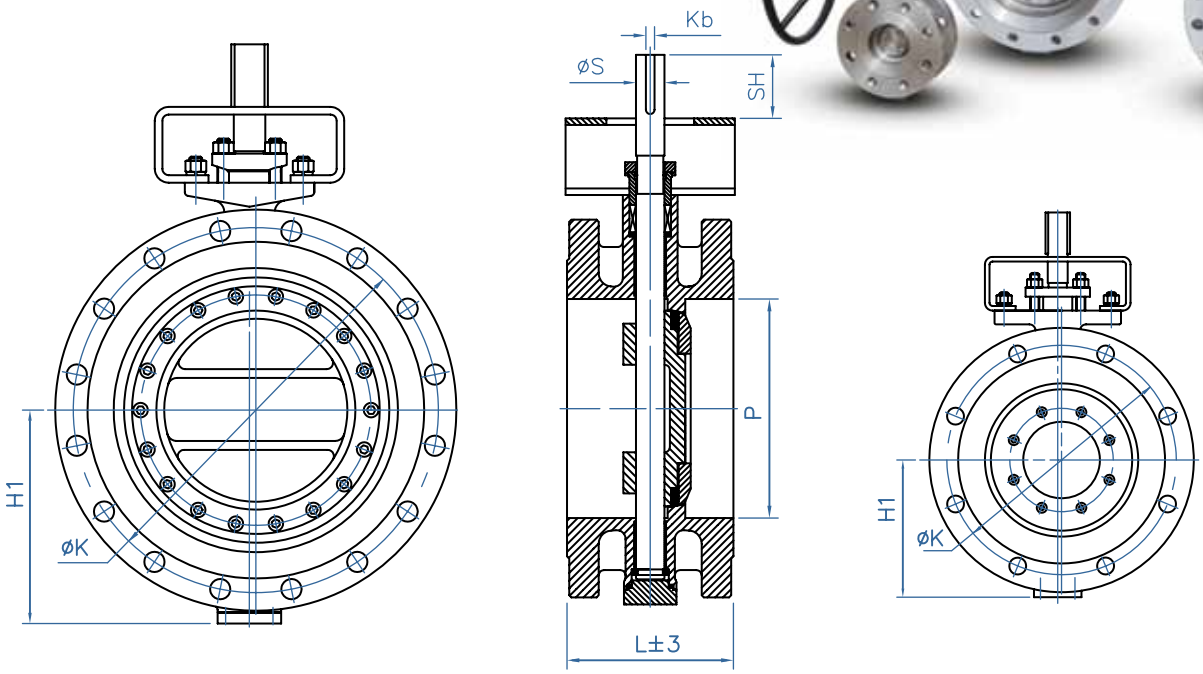

Class 150									
Size	P	L	K	H1	S	SH	Kb x Key	ISO Flg	Wgt
3	3.00	4.50	6.00	4.3	0.71	1.77	0.24 x 1	F07	41.8
4	4.00	5.00	7.50	5.1	0.71	1.77	0.24 x 1	F07	55.0
6	6.00	5.50	9.50	5.9	0.87	2.20	0.31 x 1	F10	88.0
8	8.00	6.00	11.75	7.5	1.02	2.20	0.31 x 1	F12	134.2
10	10.00	6.50	14.25	8.7	1.18	2.36	0.39 x 1	F12	187.0
12	12.00	7.00	17.00	10.2	1.42	2.76	0.47 x 1	F14	308.0
14	13.25	7.50	18.75	11.2	1.57	3.94	0.47 x 2	F16	374.0
16	15.25	8.50	21.25	12.6	1.77	3.94	0.47 x 2	F16	547.8
18	17.25	8.75	22.75	13.6	1.97	3.94	0.63 x 2	F16	704.0
20	19.25	9.00	25.00	15.2	2.17	4.33	0.71 x 2	F25	825.0
24	23.25	10.50	29.50	17.7	2.56	4.33	0.87 x 2	F30	1188.0

Class 300									
Size	P	L	K	H1	S	SH	Kb x Key	ISO Flg	Wgt
3	3.00	4.50	6.63	4.7	0.71	1.77	0.24 x 1	F07	48.4
4	4.00	5.00	7.88	5.7	0.71	1.77	0.24 x 1	F07	74.8
6	6.00	5.50	10.63	7.1	1.02	2.20	0.31 x 1	F12	116.6
8	8.00	6.00	13.00	8.1	1.18	2.76	0.39 x 2	F14	182.6
10	10.00	6.50	15.25	9.4	1.42	2.76	0.47 x 2	F16	248.6
12	12.00	7.00	17.75	11.0	1.57	3.94	0.47 x 2	F16	352.0

Dimensional data on sizes and pressures not shown is available upon request.

Long Pattern Design Technical Data

Size: 3” thru 120”
Class: 150 thru 300

Valve Design: API 609
Flange Dimensions: ASME B16.5, B16.47 (Series A) ANSI B16.10
Tested in Accordance with: API 598

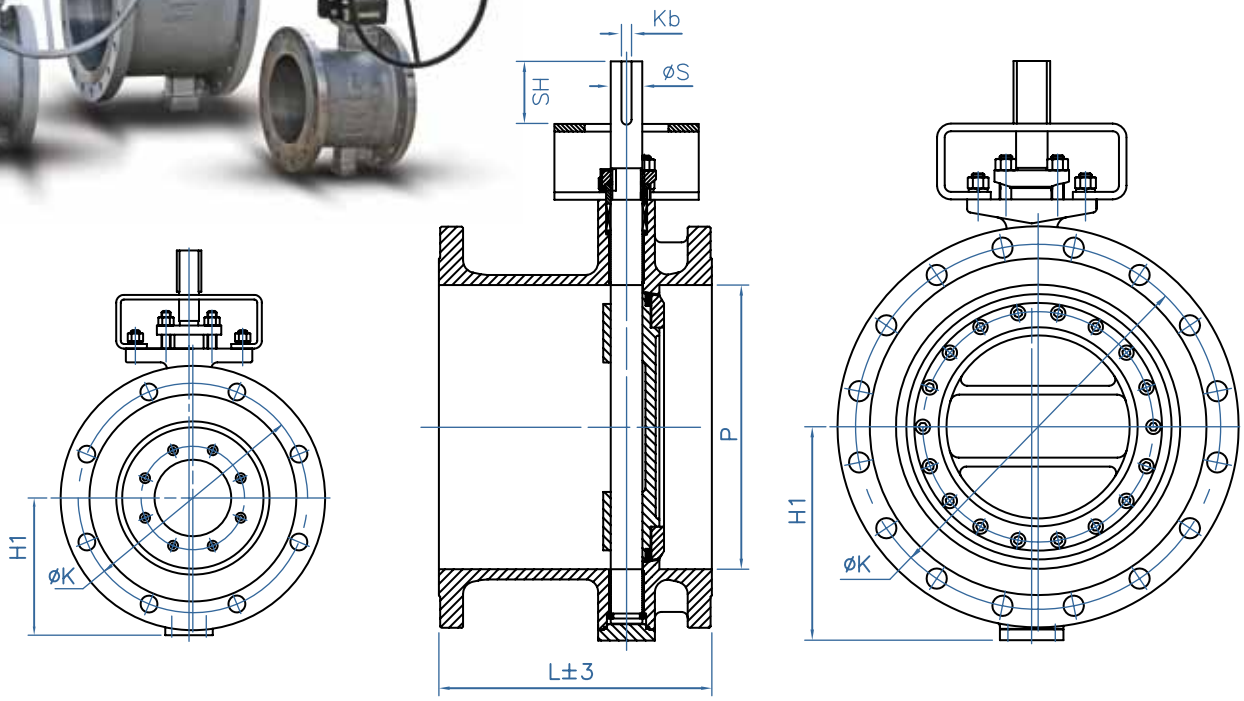

Class 150									
Size	P	L	K	H1	S	SH	Kb x Key	ISO Flg	Wgt
3	3.00	8.00	6.00	4.30	0.71	1.77	0.24 x 1	F07	46.2
4	4.00	9.00	7.50	5.10	0.71	1.77	0.24 x 1	F07	52.8
6	6.00	10.50	9.50	5.90	0.87	2.20	0.31 x 1	F10	103.4
8	8.00	11.50	11.75	7.50	1.02	2.20	0.31 x 1	F12	156.2
10	10.00	13.00	14.25	8.70	1.18	2.36	0.39 x 1	F12	233.2
12	12.00	14.00	17.00	10.20	1.42	2.76	0.47 x 1	F14	325.6
14	13.25	15.00	18.75	11.20	1.57	3.94	0.47 x 2	F16	462.0
16	15.25	16.00	21.25	12.60	1.77	3.94	0.47 x 2	F16	633.6
18	17.25	17.00	22.75	13.60	1.97	3.94	0.63 x 2	F16	781.0
20	19.25	18.00	25.00	15.20	2.17	4.33	0.71 x 2	F25	941.6
24	23.25	20.00	29.50	17.70	2.56	4.33	0.87 x 2	F30	1551.0

Class 300									
Size	P	L	K	H1	S	SH	Kb x Key	ISO Flg	Wgt
3	3.00	11.12	6.63	4.80	0.71	1.77	0.25 x 1	F07	61.6
4	4.00	12.00	7.87	5.70	0.71	1.77	0.25 x 1	F07	66.0
6	6.00	15.88	10.63	7.10	1.02	2.20	0.31 x 1	F12	158.4
8	8.00	16.50	13.00	8.10	1.18	2.76	0.39 x 2	F14	231.0
10	10.00	18.00	15.25	9.40	1.42	2.76	0.47 x 2	F16	308.0
12	12.00	19.75	17.75	11.00	1.57	3.94	0.47 x 2	F16	459.8

Dimensional data on sizes and pressures not shown is available upon request.

Lug Valve Thread Dimensions

Class 150	
Size	**Thread**
3	4 x 5/8" - 11 UNC / 18mm deep
4	8 x 5/8" - 11 UNC / 20mm deep
6	8 x 3/4" - 10 UNC / 22mm deep
8	8 x 3/4" - 10 UNC / 25mm deep
10	12 x 7/8" - 9 UNC / 30mm deep
12	12 x 7/8" - 9 UNC / 34mm deep
14	12 x 1" - 8 UNC / 40mm deep
16	16 x 1" - 8 UNC / 40mm deep
18	16 x 1-1/8" - 8 UN / 43mm deep
20	20 x 1-1/8" - 8 UN / 43mm deep
24	20 x 1-1/4" - 8 UN / 55mm deep

Class 300	
Size	**Thread (Pro Seite / per side)**
3	6 x 3/4" - 10 UNC / 18mm deep
4	8 x 3/4" - 10 UNC / 22mm deep
6	10 x 3/4" - 10 UNC / 22mm deep
8	12 x 7/8" - 9 UNC / 27mm deep
10	12 x 1" - 8 UNC / 30mm deep
12	12 x 1-1/8" - 8 UN / 40mm deep
14	16 x 1-1/8" - 8 UN / 43mm deep
16	16 x 1-1/4" - 8 UN / 48mm deep
18	20 x 1-1/4" - 8 UN / 48mm deep
20	20 x 1-1/4" - 8 UN / 48mm deep
24	20 x 1-1/2" - 8 UN / 58mm deep

Class 600	
Size	**Thread (Pro Seite / per side)**
3	6 x 3/4" - 10 UNC / 20mm deep
4	8 x 7/8" - 9 UNC / 21mm deep
6	10 x 1" - 8 UNC / 32mm deep
8	10 x 1-1/8" - 8 UN / 35mm deep
10	12 x 1-1/4" - 8 UN / 47mm deep
12	16 x 1-1/4" - 8 UN / 48mm deep
14	16 x 1-3/8" - 8 UN / 60mm deep
16	16 x 1-1/2" - 8 UN / 58mm deep
18	16 x 1-5/8" - 8 UN / 65mm deep
20	20 x 1-5/8" - 8 UN / 65mm deep

Pressure Temperature Ratings

Ratings in PSIG (ANSI B16.34)

Temperature		ANSI 150		ANSI 300		ANSI 600	
Fahrenheit	Celsius	Carbon Steel	Stainless Steel**	Carbon Steel	Stainless Steel**	Carbon Steel	Stainless Steel**
-80[A] to 100	-62[A] to 38	285	275	740	720	1480	1440
200	93	260	240	675	620	1350	1240
300	149	230	215	655	560	1315	1120
400	204	200	195	635	515	1270	1030
500	260	170	170	600	480	1200	955
600	316	140	140	550	450	1095	905
650	343	125	125	535	445	1075	890
700	371	110	110	535	430	1065	865
750	399	95	95	505	425	1010	845
800*	427	80	80	410	415	825	830
850	454	65	65	270	405	535	810
900	482	50	50	170	395	345	790
950	510	35	35	105	385	205	775
1000	538	20	20 (a)	50	365	105	725
1100	593	-	20 (a)	-	305	-	610
1150	621	-	20 (a)	-	235	-	475
1200	649	-	20 (a)	-	185	-	370
1250	677	-	20 (a)	-	145	-	295
1300	704	-	20 (a)	-	115	-	235
1350	732	-	20 (a)	-	95	-	190
1400	760	-	20 (a)	-	75	-	150
1450	788	-	20 (a)	-	60	-	115
1500	816	-	15 (a)	-	40	-	85

* = WCB permissible but not recommended for prolonged use above 800°F (427°C).
** = Above 800°F Stainless Steel body valves, stem material to be determined.
A = Low temperature gas test per API 598 for services below -20°F (316SS & PTFE Seals).
(a) = Flanged-end valve ratings terminate at 1,000°F (538°C) for ANSI 150 Class.

Body Top Mounting Flange

Size	Class 150			Class 300		
	L	H	M	L	H	M
3	3.70	0.98	M8	3.70	0.98	M8
4	3.70	0.98	M8	3.70	0.98	M8
6	3.94	1.02	M10	5.51	1.02	M12
8	5.51	1.02	M12	5.51	1.34	M14
10	5.51	1.34	M12	6.50	1.57	M16
12	6.50	1.57	M16	6.89	1.77	M18
14	6.50	1.57	M16	-	-	-
16	6.89	1.77	M18	-	-	-
18	6.69	2.16	M20	-	-	-
20	8.66	2.36	M24	-	-	-
24	9.45	3.15	M24	-	-	-

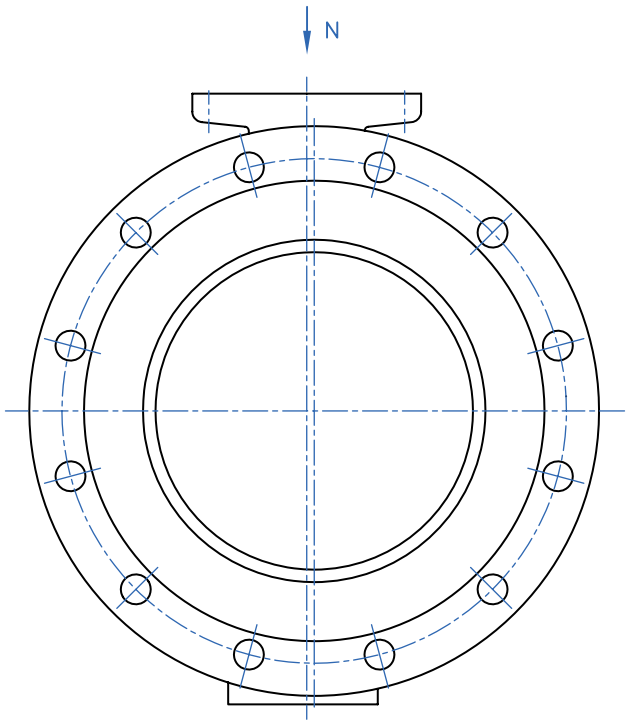

N DIRECTION

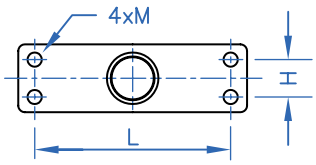

Cv Values

General

The flow coefficient or Cv value is used to describe the inherent flow capacity of a valve. This Cv value is defined as the number of U.S. gallons of water per minute at standard conditions (60°F and 14.7 PSIA) that will flow through a valve at a constant 1.0 PSI pressure drop. The capacity of the valve with other fluids at various flowing conditions can be calculated using the basic Cv value. The following tables indicate the Cv values at full open conditions.

Class 150									
Size	10%	20%	30%	40%	50%	60%	70%	80%	90%
3	3	10	22	42	64	96	150	157	160
4	6	17	41	75	116	174	273	284	290
6	17	51	119	221	340	510	799	833	850
8	34	103	239	445	684	1026	1607	1676	1710
10	50	151	353	655	1008	1512	2369	2470	2520
12	79	236	552	1024	1576	2364	3704	3861	3940
14	106	319	743	1381	2124	3186	4991	5204	5310
16	168	504	1176	2184	3360	5040	7896	8232	8400
18	203	609	1421	2639	4060	6090	9541	9947	10150
20	251	752	1756	3260	5016	7524	11788	12289	12540
24	367	1100	2568	4768	7336	11004	17240	17973	18340

Class 300									
Size	10%	20%	30%	40%	50%	60%	70%	80%	90%
3	3	10	22	42	64	96	150	157	160
4	6	17	41	75	116	174	273	284	290
6	17	51	119	221	340	510	799	833	850
8	34	103	239	445	684	1026	1607	1676	1710
10	50	151	353	655	1008	1512	2369	2470	2520
12	79	236	552	1024	1576	2364	3704	3861	3940
14	96	289	675	1253	1928	2892	4531	4724	4820
16	142	426	994	1846	2840	4260	6674	6958	7100
18	187	562	1310	2434	3744	5616	8798	9173	9360
20	234	702	1638	3042	4680	7020	10998	11466	11700
24	338	1014	2366	4394	6760	10140	15886	16562	16900

CLASS 600											
Cv - Full Open											
SIZE	3"	4"	6"	8"	10"	12"	14"	16"	18"	20"	24"
Cv	-	246	720	1,450	2,140	3,350	4,100	6,035	7,955	9,940	14,360

How to Order Trinity Triple Offset Valves

Trinity Triple Offset Valves

Sizes: 3" thru 120"
DN: 80 thru 3000
ASME 150, 300, & 600
PN16, 25, 40, & 100
Newmans Triple Offset Valves feature standard Stellite body seats, robust laminated disc seats, and unique graphite stem bearing seals for exceptional service life.

End Connections

- *Wafer*
- *Lug*
- *Flanged*
- *Buttweld*

Technical Demand Features

- *Design and manufactured to ASME B16.34, API 609, ANSI B16.10, B16.5, & ISO 5752*
- *Test and Inspect to API 598*
- *Flange to ASME B16.5*
- *Face-to-Face to API 609 & DIN*
- *Firetest per API 607*
- *Materials to NACE Requirements*
- *Fugitive Emissions Tested ISO 15848-1*

Figure Number

The figure number shown below identifies specific valve configuration details of Newco triple Offset valves such as valve type, pressure class, end connections, body/bonnet & trim materials, and special features.

Please specify end connections, body materials, and trims not listed below.

When placing an order, please refer to the respective product section of the catalog for size availability. A detailed description must be included with any special orders.

Fig. 91F-CBN-NC-FS-WGO

Type
9 = Triple Offset

Pressure Class
1 = 150
3 = 300
6 = 600

End Connections
F = Flanged (Long Pattern to B16.10)
P = Lug
Q = ISO Flange 5752 (Short Pattern)
Z = Wafer
W = Buttweld

Disc/Stem/Seat Material
N = Carbon Steel/17-4ph Cond. H1150D/316SS Graphite
I = 316 Stainless Steel/17-4ph Cond. H1150D/316SS Graphite
S = 304 Stainless Steel/17-4ph Cond. H1150D/316SS Graphite
5 = Monel/Monel/Monel Graphite
A = Hastelloy C 276/HC/HC Graphite
C = Nickel - Aluminum - Bronze/NAB/NAB graphite
L = Special (Customer to Specify)

Material Certification
NC = Nace MR0103

Firesafe Standard
FS = Firesafe API 607 rev5

Suffix Letters
BA = Bare Stem
CR = Cryogenic Service
CW = Chain Wheel
EB = Extended Body
WGO = Worm Gear Operated
HO = Hydraulic Operator
LV = Live Load Packing
MO = Motor Operated
PO = Pneumatic Operator
SPL = Special (Customer to specify)
*** = Monel® is a registered trademark of Special Metals Corp.

Body Material

A20	ASTM A351, CN7M	Cast Alloy 20
CB	ASTM A216, WCB	Cast Carbon Steel
CF3	ASTM A351, CF3	Cast 304L Stainless Steel
C3M	ASTM A351, CF3M	Cast 316L Stainless Steel
CF8	ASTM A351, CF8	Cast 304 Stainless Steel
C8M	ASTM A351, CF8M	Cast 316 Stainless Steel
LCC	ASTM A352, LCC	Cast Low Temperature Carbon Steel
CM	ASTM A414, M35	Cast NI Cu (Monel***)
HC	ASTM A494, CW 12MW	Hastelloy C 276
NAB	ASTM B148 C95800	Nickel - Aluminum - Bronze
SPL	Special (Customer to specify)	

Limited Warranty

Newmans warrants to the original purchaser, for a period of one year from and after the date of delivery to the original customer, that its products will be free from defects in workmanship and materials, not caused or resulting from improper usage or application, improper installation, improper maintenance, repair modification or alterations.

In the event the original purchaser shall determine that a product purchased from Newmans shall be defective in workmanship or materials, the customer shall notify the Newmans Warranty Representative by telephone (713) 675-8631 within 24 hours from such determination, followed by written notice to such effect within 7 days therefrom, addressed to:

Newmans
13127 Trinity Dr.
Stafford, Texas 77477

In the event Newmans shall determine that the product is defective as a result of factory workmanship, based upon such examination of the product which Newmans may deem appropriate, Newmans shall thereupon, at its sole option, (a) cause the defective product to be repaired, (b) replaced with a substantially identical product, or (c) accept the return of a defective product and refund the purchasing price to the original purchaser. Newmans shall bear all normal surface transportation costs to the original purchaser but shall in no event bear any installation, re-installation, engineering or other costs incurred in connection with repair or replacement.

Unless Newmans shall have provided engineering and/or suitability of application or installation services for a purchaser, for which a separate charge shall have been specifically identified and made, the selection, suitability, installation and fitness of all products sold by Newmans shall be deemed to have been determined exclusively by and within the sole discretion of the purchaser. Accordingly, Newmans disclaims any obligation, warranty or guarantee in any manner relating to or resulting from the selection, application, suitability, fitness or installation of its products.

The foregoing constitutes the sole obligation of Newmans with respect to defective products purchased from it and in no manner shall Newmans assume or be liable for any other expenses, incidental or consequential damages, losses, lost profits, down time or otherwise, whether directly or indirectly suffered, or in any other manner relating to or as the result of any defect or failure or any product that it may sell.

Except as otherwise provided herein, NEWMANS MAKES NO WARRANTIES OR REPRESENTATIONS, WHETHER EXPRESSED OR IMPLIED, OF ANY KIND WHATSOEVER WITH RESPECT TO GOODS AND PRODUCTS SOLD BY IT, INCLUDING WITHOUT LIMITATION, ANY WARRANTIES WITH RESPECT TO MERCHANTABILITY OR FITNESS FOR A PARTICULAR PURPOSE. NO PERSON IS AUTHORIZED TO GRANT OR EXTEND ANY WARRANTY OR REPRESENTATION ON BEHALF OF NEWMANS OTHER THAN AS SET FORTH HEREIN.

Industry Standards Typically Used in Valve Manufacturing

(For Reference Only)

ISO 9001: 2000
RWTUV had approved Newmans for design, manufacture, sales, & service of industrial valves under certificate registration number #05-1026

American Petroleum Institute (API)

API RP 574 (1998) - Inspection practices for piping system components
API 589 (1998) - Fire test for evaluation of valve stem packing
API RP 591 (2003) - Process valve qualification procedure
API 594 (2004) - Check valves-flanged, lug, wafer & buttwelding
API 597 (1981) - Steel venturi gate valves, flanged, buttwelding ends
API 598 (2004) - Valve inspection & testing
API 599 (2002) - Metal plug valves - flanged, welding ends
API 601 (1988) - Metallic gaskets for raised-face pipe flanges & flanged connections (double-jacketed corrugated & spiral wound)
API 600 (2001) - Bolted bonnet steel gate valves for petroleum & natural as industries "ISO adoption from ISO 10434"
API 602 (2005) - Steel gate, globe, & check valves for sizes DN100 and smaller for the petroleum & natural gas industries
API 603 (2001) - Corrosion-resistant, bolted bonnet gate valves-flanged & buttweld ends
API 604 (1981) - Ductile iron gate valves, flanged ends
API 605 (1988) - Large-diameter carbon steel flanges (nominal pipe sizes 26" through 60", classes 75, 150, 300, 400, 600, & 900 (replaced by ANSI/ASME B16.47)
API 606 (1989) - Compact steel gate valves, extended body (included in API 602) fire test for soft-seated quarter-turn valves "ISO adoption from ISO 10497-5 2004"
API 607 (2005) - Fire test for soft-seated quarter-turn valves "ISO adoption from ISO 10497-5 2004"
API 608 (2002) - Metal ball valves, flanged, threaded, & welding ends
API 609 (2004) - Butterfly valves-double flanged, lug- & wafer-type
API RP 941 (2004) - Steel for hydrogen service at elevated temperatures & pressures in petroleum refineries & petrochemical plants
API RP 520 (2000), Part 1 - Sizing, selection & installation of pressure relieving devices in refineries
API RP 520 (2003), Part 2 - Sizing, selection & installation of pressure relieving devices in refineries devices in refineries
API Spec 6A (2005) - Specification for wellhead & christmas tree equipment
API Spec 6D (2005) - Specifications for pipeline valves
API Spec 14D (1994) - Specifications for wellhead surface safety valves & underwater safety valves for offshore service
API 5B (2004) - Threading, gauging thread inspection of coring, tubing, & line pipe threads
API 6AM (2003) - Material toughness
API 6FA (1999) - Fire test for valves
API 6FC (1999) - Fire test for valves with backseats
API 6FD (1995) - Specification for fire test for check valves
API Q1 (2003) - Specification for quality programs for the petroleum, petrochemical, & natural gas

American Society of Mechanical Engineers (ASME)

ASME Code (1997 addenda) - Boiler & pressure vessel code
ASME A13.1 (1996) - Scheme for the identification of piping systems
ASME B1.1 (2003) - Unified inch screw threads, UN, & UNR thread form
ASME B1.5 (1997) - ACME screw threads
ASME B1.7M (1984) - Nomenclature, definitions, & letter symbols for screw threads
ASME B1.8 (1988) - Stub ACME screw threads
ASME B1.12 (1987) - Class 5 interference - fit thread
ASME B1.20.1 (1983) - Pipe threads, general purpose, inch
ASME B1.20.3 (1976) - Dry-seal pipe threads, inch
ANSI/ASME B16.1 (1998) - Cast iron pipe flanges & flanged fittings
ANSI/ASME B16.5 (2003) - Pipe flanges & flanged fittings: NPS 1/2" through 24"
ASME B16.9 (2003) - Factory made wrought steel buttwelding fittings
ANSI/ASME B16.10 (2002) - Face-to-face & end-to-end dimensions of valves
ASME B16.11 (2001) - Forged fittings, socket welding & threaded
ASME B16.20 (1998) - Metallic gaskets for pipe flanges: ring joint spiral wound & jacketed
ASME B16.21 (2005) - Non-metallic flat gaskets for pipe flanges
ASME B16.25 (2003) - Buttwelding ends
ANSI/ASME B16.33 (2002) - Manually operated metallic gas valves for use in gas piping systems up to 125 PSI (sizes NPS 1/2" through 2")
ANSI/ASME B31.1 (2004) - Power piping
ANSI/ASME B31.3 (2004) - Process piping
ANSI/ASME B16.34 (2004) - Valves flanged, threaded & welding end
ANSI/ASME B16.36 (1996) - Orifice flanges
ANSI/ASME B16.38 (1985) - Large metallic valves for gas distribution (manually operated, NPS 2-1/2" through 12", 125 PSIG maximum)
ANSI/ASME B16.42 (1998) - Ductile iron pipe flanges & flanged fittings: classes 150 & 300
ANSI/ASME B16.47 (1996) - Large diameter steel flanges
ANSI B17.1 (1967, R' 89) - Keys & keyseats
ANSI B18.2.2 (1987) - Square & hex nuts
ASME B31.4 (2002) - Pipeline transportation systems for liquid hydrocarbons & other ammonia & alcohols
ANSI/ASME B31.8 (2003) - Gas transmission & distribution piping systems
ANSI/ASME B36.10 (2004) - Welded & seamless wrought steel pipe
ANSI/ASME B36.19 (2004) - Stainless steel pipe
ANSI FCI-2 (1991) - Control valve seat leakage

American Society Non-destructive Test (ASNT)

ASNT-TC-1A (1996) - Recommended practice no. SNT-TC-1A 1996

American Society for Testing and Materials (ASTM)

British Standards Institute (BS)

BS 1414 (1975, R' 91) - Gate, wedge & double disk valves: steel
BS 1868 (1975, R' 91) - Check valves: steel
BS 1873 (1975, R' 91) - Globe & check valves: steel
BS 2080 (1989) obsolete - Flanged & buttweld end steel valves
BS 5146 - (withdrawn) Replaced by BS 6755 p.1 steel valves testing (1986) & BS 6755 p.2 (1984)
BS 5152 (1974, R' 91) - Globe & check: cast iron
BS 5153 (1974, R' 91) - Check: cast iron
BS 5159 (1974, R' 91) - Ball: cast iron & carbon steel
BS 5160 (1974, R' 91) - Globe & check: steel
BS 5163 (1986, R' 91) - Gate, wedge & double disk: cast iron
BS 5351 (1986, R' 91) - Ball: steel
BS 5352 (1986, R' 91) - Globe & check: steel
BS 5418 - (withdrawn) Replaced by BS EN 19 (1992) marking: general purpose industrial
BS 5840 (1980, R' 91) - Valve mating details for actuator operation
BS 6364 (1984, R' 91) - Cryogenic
BS 6683 (1985, R' 91) - Guide: installation & use of valves
BS 6755: Part 1 (1986, R' 91) - Specification for production pressure testing requirements
BS 6755: Part 2 (1987) - Specification for fire type-testing requirements
BS EN 19 (1992) - Marking of general purpose industrial valves

Canadian Standards Association

B51-97 - Boiler, pressure vessel, & pressure piping code
Z245.15-96 - Steel valves
CAN3-z299.4-85 (reaffirmed 1997) - Quality assurance program - Category 4
CAN3-z299.3-85 (reaffirmed 1997) - Quality assurance program - Category 3

International Organization for Standardization

ISO 5211/1 (2001) - Industrial valves- part-turn actuator attachments
ISO 5211/2 (2001) - Part-turn valve actuator attachment-flange & coupling performance characteristics
ISO 5211/3 (2001) - Part-turn valve actuator attachment-dimensions of driving components
ISO 5752 (1982) - Metal valves for use in flanged pipe systems face-to-face & center-to-face dimensions
ISO 9000 (2005) - Quality management systems and fundamentals & vocabulary
ISO 10012-1 (1992) - Quality assurance requirements for measuring equipment

Manufacturers Standardization Society

SP-6 (2001) - Standard finishes for contact faces of pipe flanges & connecting-end flanges of valves & fittings
SP-9 (r2005) - Spot facing for bronze, iron & steel flanges
SP-25 (1998) - Standard marking system for valves, fittings, flanges & unions
SP-42 (2004) - Class 150 corrosion resistant gate, globe, angle, & check valves with flanged & buttweld ends
SP-44 (2001) - Steel pipeline flanges
SP-45 (2003) - Bypass & drain connections
SP-51 (2003) - Class 150/w corrosion resistant cast flanges & flanged fittings
SP-53 (2002) - Quality standard for steel castings & forgings for valves, flanges, & fittings & other piping components: magnetic particle exam method
SP-54 (2002) - Quality standard for steel castings for valves, flanges, & fittings and other piping components: radiographic examination method
SP-55 (2001) - Quality standard for steel castings for valves, flanges other piping components-visual method for evaluation of surface irregularities
SP-60 (2004) - Connecting flange joint between tapping sleeves & tapping valves
SP-61 (2003) - Pressure testing of steel valves
SP-65 (2004) - High pressure chemical industry flanges & threaded stubs for use with lens gaskets
SP-67 (2000A) - Butterfly valves
SP-69 (2003) - ANSI/MSS edition pipe hangers & supports, selection & application
SP-70 (1998) - Cast iron gate valves, flanged & threaded ends
SP-71 (1997) - Gray iron swing check valves, flanged & threaded ends
SP-72 (1999) - Ball valves with flanged or butt-welding ends for general service
SP-79 (2004) - Socket-welding reducer inserts
SP-81 (2001) - Stainless steel, bonnetless, flanged knife gate valves
SP-82 (1992) - Valve pressure testing methods
SP-84 (1990) - Valves - socket welding & threaded ends
SP-85 (2002) - Cast iron globe & angle valves, flanged & threaded ends
SP-86 (2002) - Guidelines for metric data in standards for valves, flanges, fittings & actuators
SP-88 (r2001) - Diaphragm valves
SP-91 (1992) - Guidelines for manual operation of valves
SP-92 (1999) - MSS valve user guide
SP-93 (r2004) - Quality standard for steel castings & forgings for valves, flanges & fittings & other piping components- liquid penetrant exam method
SP-94 (r2004) - Quality standard for ferritic & martensitic steel castings for valves, flanges, & fittings and others piping components - ultrasonic exam method
SP-96 (r2005) - Guidelines on terminology for valves & fittings
SP-98 (2001) - Protective coatings for the interior of valves, hydrants, & fittings
SP-99 (r2005) - Instrument valves
SP-101 (r2001) - Part-turn valve actuator attachment-flange and driving component dimensions & performance characteristics
SP-102 (r2001) - Multi-turn valve actuator attachment: flange and driving component dimensions & performance characteristics
SP-110 (1996) - Ball valves threaded, socket-welding, solder joint, grooved, & flared ends
SP-117 (2002) - Bellows seals for globe & gate valves
SP-118 (2002) - Compact steel globe and check valves-flanged, flangeless, threaded & welding ends (chemical & petroleum refinery service)
SP-120 (2002) - Flexible graphite packing system for rising stem steel valves (design requirements)
SP-121 (R2002) - Qualification testing methods for stem packing for rising stem steel valves

National Association of Corrosion Engineers (NACE)

MR0175 (2005) - Sulfide stress cracking resistant metallic materials for oil field equipment
MR0103 (2005) - Materials resistant to sulfide street cracking in corrosive petroleum refining environments

Terms & Conditions

Definitions

1) Supplier
"Supplier" refers to NEWCO Valves LP dba NEWMANS, a Texas (USA) limited partnership, and all of its affiliated or related entities, including, but not limited to, its parent, subsidiary, affiliated companies, their officers, directors, employees and agents, individually and collectively.

2) Customer
"Customer," refers to all of the following:
a) any party acting as agent for the Customer, the party ordering goods or services on behalf of himself, herself or itself and others;
b) the person signing Supplier's credit application, service order, bill of lading, delivery receipt or ticket;
c) the store, factory, warehouse, shipping company, accepting agent, contractor or subcontractor of the job site, store, warehouse, transportation company, accepting agent;
d) the person accepting and/or ordering Supplier's goods and services acknowledges that he or she has the actual and apparent agency authority to bind the Customer and owner of the property the product will improve, to the terms and conditions of this agreement, all of whom are included in the term "Customer"; and
e) the person paying the invoices of Supplier, signing Supplier's service orders, delivery tickets, bills of lading or other Supplier contracts, acknowledges that he or she is the agent of the Customer and/or any entity who is benefited by the Supplier's product, and that they are said person's agent.

3) Equipment
"Equipment" refers to any goods and service, item of supply or equipment or property ordered or purchased by Customer or the Customer's agent from Supplier or provided by Supplier, including, but not limited to: valves, pipe, fittings, product or general equipment, supplies, parts, materials, supplies and/or merchandise sold by Supplier or provided in connection with Supplier's provider capabilities or needed by Supplier to assist Supplier in the performance and delivery of its product to Customer, but "Equipment" excludes "Services" as defined below.

4) Services
"Service(s)" refers to all employees or agents furnished by Supplier as consultants and/or to perform any function, including the operation of equipment which performs any function, trucks or other merchandise necessary to perform any function when operated by Customer's employees or agents or the Supplier's employees or agents on Customer's job or to satisfy the Customer's order or orders.

5) Claims
"Claim(s)" refers to all of the following:
a) any liability of Supplier to Customer; b) loss of equipment, time, money, or profit of Supplier; and c) claim, demand, cause of action, proceeding, damage to person, damage to personal or real property, damage and penalty, including attorney's fees, costs and expenses.

6) Price Book, Price List, Manual, & Credit Application
Customer agrees to be bound by all relevant provisions of the following:
a) "Supplier's Price Book" and "Price Book" refer to the current book published by Supplier which may list the Supplier's contractual terms and conditions, lists prices for Equipment and Services offered by Supplier, including all amendments;
b) "Supplier's Manual," "Manual" and "Employee Manual" refer to any manual of Supplier governing, which may contain its contractual terms and conditions, the procedures for pricing Equipment and Services of Supplier, or the manner in which Supplier is to provide goods or services plus all amendments and updates. Customer agrees to be bound by such terms and conditions, procedures; and
c) "Supplier's Credit Application" and "Credit Application" refer to any application or request submitted by Customer to Supplier for the purpose of seeking the extension of credit by Supplier and which may contain the Supplier's terms and conditions all of which shall be binding on the Customer.

General Terms & Conditions

Customer acknowledges that it has reviewed and agrees to be bound by the above and following (Definitions, Terms and Conditions and all of the language contained herein and in related documents described elsewhere herein) whenever it or its employees, transportation and/or warehouse company, its customer or end user, and/or agent either: i) accepts the Equipment or Services of Supplier; or ii) signs a Credit Application, service order, delivery ticket, bill of lading or contract for goods or services; or iii) receives an invoice from Supplier and/or orders more Equipment or Services from Supplier.

1) Entire Contract
The Terms and Conditions herein, in the invoice, acknowledgement or acceptance of Customer's order, Price Book, Manual and Credit Application as defined above and elsewhere herein, the other documents aforementioned, all of which are incorporated herein by reference for all purposes, constitute the entire contract ("Contract") between the parties and may not be amended except in writing signed by Supplier's authorized representative.

2) Controlling Terms and Conditions
Equipment or Services furnished to Customer by Supplier or its agents will be controlled only by the Terms and Conditions contained herein and contained in the other documents of Supplier mentioned herein and these are the only terms and conditions to which these parties shall be bound. In the event that Customer writes any letters or uses any other document generated by Customer to order or accept Supplier's Equipment or Services, the Terms and Conditions contained herein shall control and this document does hereby serve as an objection thereto.

3) Failure of Any Party to Enforce
The failure of either party to enforce any provision hereof will not constitute a waiver or preclude subsequent enforcement thereof.

4) Invalidity of Any Term or Condition Contained Herein
No partial invalidity of this Contract will affect the remainder. In the event that any term or condition contained herein is found to be invalid, the parties agree that the remainder of Supplier's contract shall remain valid.

5) Jurisdiction and Venue; Construction of Terms and Conditions
The Parties hereto agree that the terms and conditions of Supplier's documents mentioned herein and the Terms and Conditions of this document shall be construed in accordance with the laws of the State of Texas or, if offshore, in accordance with General Maritime Law of the United States, without giving effect to respective conflicts of law principals, or Supplier at its exclusive option may choose the Jurisdiction to interpret the terms and conditions contained herein and in the other documents mentioned herein. In the event of litigation between Customer and Supplier, Customer hereby waives any claim it may have to any jurisdiction and venue other than that chosen by Supplier. Customer agrees that it is to perform its obligations herein in Houston, Harris County, Texas, non-exclusively to include payment. Canada: Whenever the facts of a particular contract would in the sole opinion of the Supplier be best litigated in Canada, the parties agree that Supplier can choose that jurisdiction and that Supplier can choose any venue it deems appropriate in Canada. All the other terms and conditions contained in this document shall then apply in Canada as if this agreement was in the United States of America.

6) Credit
Terms are cash in advance unless credit is approved in writing prior to the sale. If credit is approved, Customer must maintain credit satisfactory to Supplier. When Customer or its agent signs any of Supplier's documents in the process of ordering or receiving Equipment or Services from Supplier, it states for Supplier's reliance that it has the current ability to pay for the Equipment or Services ordered or accepted and it further agrees that Supplier reserves the right to require Customer to furnish security for performance of Customer's obligations. Payments shall be made in U.S. Dollars net 30 days at Supplier's address in Houston, Harris County, Texas. If credit terms are not met or Customer otherwise fails to follow the Terms and Conditions contained herein, in addition to its other legal rights, Supplier may and Customer hereby authorizes Supplier to: a) defer or cancel further shipments of Equipment or Services and/or otherwise decline to provide its product to Customer; b) enter upon any property or job site on which the Equipment of Supplier is located by taking any necessary action, including, but not limited to, opening gates, cutting locks, cutting chains; c) authorize any other company to remove its equipment from any location, to the extent needed for Supplier to be able to remove its equipment, and said company moving its equipment shall send its bill for the same to Customer or Supplier may pay said bill and include the same in its bill to Customer; d) take any action needed to remove its equipment from the job site; e) act as stated herein at the expense of Customer and Customer hereby indemnifies and holds harmless Supplier from any harm arising from said actions, including, but not limited to, environmental harm, harm to the real property and personal property and harm to the real and personal property of any third party; and f) charge Customer interest on any unpaid balance at the lesser of: i) eighteen percent (18%) per annum, or ii) the maximum rate permitted by applicable law.

7) Taxes
Customer shall be responsible for all customs fees, duties, and foreign, federal, state or local taxes (including, sales, use, excise or similar taxes and foreign withholding taxes).

8) Transportation
For Equipment sold, Customer may arrange shipment and will pay all crating, handling and shipping costs. Risk of loss passes to Customer at the time Customer and/or any carrier takes possession of the Equipment from Supplier. For Equipment sold where Customer does not timely furnish shipping instructions or requests that Supplier arrange shipment, such transportation shall be in a commercially reasonable manner at Customer's risk and invoiced to Customer at current freight rates, plus all handling incurred, or at the prevailing mileage rate for any vehicles used by Supplier's personnel. Risk of loss will then pass to Customer at the time the Equipment leaves Supplier's premises, warehouse or store. All claims for shortages, damages, corrections or deductions must be made in writing within 10 days from receipt of goods and if shipper fails to comply, it waives its right to make a claim.

9) Consequential and Incidental Damages
Supplier will not be responsible for consequential or incidental damages of any kind, which shall include, but not be limited to, loss of profits, use or business opportunity, damages for failure to meet deadlines, pollution damage and/or wreck or debris removal expense and Customer holds harmless and indemnifies Supplier from all harm arising from any claims made against Supplier from out of any of these things.

10) Force Majeure
Supplier will not be liable for any damages, including special and consequential damages, as stated above, caused by events of force majeure or any other occurrences beyond Supplier's reasonable control subject to all of the limitations contained herein. In such event, the time for performance will be extended automatically for such reasonable time as is necessary to permit performance hereof.

11) Disclaimer Of All Warranties Except Those Specifically Granted Herein Supplier hereby disclaims all warranties except those specifically granted and states as follows:
a) Supplier makes no warranties of any kind regarding its equipment and/or services;
b) technical information and any assistance in equipment installation or technical or engineering information concerning equipment or services provided by Supplier will be advisory only, at Customer's sole cost and on an "as is" basis;
c) no warranty is given with respect to such services or information and Supplier will not be liable for any claims arising from its furnishing or Customer's use of such assistance or information;
d) Supplier specifically disclaims all implied warranties, the warranty of merchantability, warranty of fitness for a particular purpose and any warranty that the equipment or service provided by Supplier will actually accomplish the goal(s) desired by Customer. Supplier grants to Customer only a limited warranty as follows: Supplier grants only to Customer only a 1-year warranty on material and workmanship on its new products commencing at date of shipment.

12) Insurance

The parties agree that the indemnities provided by Customer to Supplier herein shall be supported either by available insurance or that Customer shall voluntarily become self-insured, in whole or part and upon request of Supplier prove that Customer is good for the loss and that Customer is sufficiently self insured. In addition, Customer shall, at its expense, maintain adequate insurance to fully protect any Equipment or Services or personnel supplied by Supplier and shall supply to Supplier, upon request, satisfactory evidence of sufficient insurance coverage to protect Supplier, Supplier's property, Supplier's personnel and Supplier's liability.

13) Prices

All Supplier's, terms, conditions, prices, rates and charges are subject to change without notice.

14) Assignment

Customer may not assign any rights or obligations hereunder, without Supplier's prior written consent.

15) Amendment of Indemnities to Conform to Law

The indemnities provided by Customer herein shall be limited to the extent necessary for compliance with applicable state and federal laws.

16) Termination/Cancellation

Unless provided otherwise in writing herein, Customer cannot terminate or cancel any order once Supplier has accepted the order. No termination shall relieve Customer of any liability incurred and Customer's obligations shall survive such termination, including all hold harmless and all indemnities and all warranties & non-warranties contained herein which are made expressly for the benefit of Supplier.

a) Termination Policy: No goods or products supplied pursuant hereto maybe returned without Supplier's written permission. Supplier assumes no responsibility without Supplier's written permission. All returns shall be made freight prepaid. Supplier will charge to Customer a 25% Restocking Charge upon the return of goods by Customer.

b) Special Orders: A special order is an order for any product of Supplier or which comes from Supplier's sources which is non standard requiring separate/additional manufacturing, engineering, modification, tooling and machining. If Supplier agrees in writing that a Special Order can be terminated, Special Orders cannot be cancelled unless Customer agrees in writing to pay for all work including engineering completed up to the time of cancellation.

17) Default

If Customer ever defaults on or breaches any Term or Condition contained herein or in any other document of Supplier mentioned above, all charges for all Equipment and Services provided by Supplier for Customer's benefit shall automatically accelerate and shall immediately become due and payable, notwithstanding any other provision which would afford Customer, under normal circumstances, any stated amount of time in which to pay for said charges. In addition, all discounts which may have been offered to Customer shall automatically and immediately be revoked and become fully due and owing with no action or notice from Supplier, notwithstanding any other provision to the contrary. If Customer ever disputes any charges of Supplier, Customer shall tender to Supplier all amounts for all charges which are not disputed by Customer. Customer hereby indemnifies and holds Supplier harmless for and agrees to reimburse Supplier for all costs of collections, including, but not limited to, actual attorney's fees and costs incurred in connection with the collection of past due amounts and defending against any counterclaims. Notwithstanding any other provision in this document or any other document or check, Customer agrees that all payments received by Supplier on Customer's account may be applied first to all outstanding interest and then to the oldest amounts owed by Customer to Supplier, and this provision is not waived by Supplier by accepting any check from Customer containing contrary language.

18) Customer Holds Harmless and Indemnifies Supplier

Customer shall hold harmless, defend, indemnify, release and hold Supplier harmless from and against any and all claims by Customer, Customer's customer, owner, or any other person or entity against Supplier of every kind or character, whatsoever, whether such claims are based on theories of contract law, tort law, or otherwise, direct or indirect, including incidental, special and consequential damages caused by Supplier arising out of delivery, pick-up, repair, use or operation of equipment or services relating to execution, completion or termination of this contract or on account of bodily injury or death or property damage, destruction or economic loss (including , but not limited to release of radioactive materials, contamination or damage to real property or personal property, land, buildings, vehicles, or property rights) because of purchase, delivery, installation, possession, operation, use, condition or return of goods, people, services and/or equipment used, purchased, or used during the term of this contract, or on account of infringement of any patent, design, copyright, or trade name or mark, whether by Supplier, Customer or otherwise, irrespective of whether Supplier was concurrently negligent or at fault for any such claims where the damage, injury or death was caused by the sole or partial negligence of Supplier.

19) Inspection

Customer's acceptance of delivery and signature of its representative on any delivery tickets or other Supplier documents is conclusive evidence that Customer found the Equipment to be suitable for its needs and in good condition and that the signor was the agent for Customer or Customer's Customer, building or land owner, contractor, sub contractor and operator. Customer also has a duty to inspect Equipment prior to use and to notify Supplier immediately of any defects and before use of the Supplier's product. SALE TERMS: The following are in addition to and a part of all other Terms and Conditions provided for herein.

20) Limited Liability/Disclaimer

a) Supplier does warrant Equipment sold by Supplier to Customer to be free from defects in material or workmanship.

b) In the event that a court finds that Supplier is liable for any breach of contract or any breach of warranty, Supplier's liability for said breach is expressly limited to the repair or replacement, at its sole option, of any Equipment which proves to be defective during any period declared by the court to be a period of warranty. All such Equipment shall be repaired or replaced F.O.B. Supplier's plant, warehouse, store or premises.

c) In the event that a court finds that Supplier has an obligation to repair or replace equipment, said repair or replacement constitutes agreed and liquidated damages for any breach of Supplier's actual or court-declared warranty.

d) The remedies stated above for any such breach thereof, shall be in lieu of all other warranties, express or implied, including all other warranties for merchantability or fitness for any particular purpose which Supplier has specifically disclaimed herein, and in lieu of liability for Supplier's negligence or fault and Customer's rights and remedies under the texas deceptive trade practices consumer protection act (chapter 17, texas business and commerce code).

21) Prices

a) Prices for standard equipment will be the sales price shown on Supplier's current product sales price list ("Price List") or Price Book, F.O.B. Supplier's plant, warehouse, district stock points, or premises.

b) Requests for quotations for nonstandard Equipment should be sent to the appropriate Supplier office. Quoted prices are valid for 30 days after the date of the quotation, unless otherwise noted on the quotation or unless canceled by Supplier prior to Customer's acceptance.

c) Cost of additional labor, materials or outside services for modification of such procedures or specifications requested by Customer will be charged to Customer at Supplier's prevailing rate.

d) Services required to install Equipment will be based on the prevailing rates at the time of installation.

22) Delivery/Disclaimer

a) Supplier will use its best efforts to have Equipment ready for shipment, subject to receipt of all necessary Customer information, including approved drawings. HOWEVER, SUPPLIER ASSUMES NO LIABILITY FOR DAMAGES INCURRED AS A RESULT OF ITS LATE DELIVERY OF EQUIPMENT, SUPPLIES, PRODUCT, PERSONAL PROPERTY, REGARDLESS OF CAUSE.

b) Title and risk of loss will pass to Customer upon delivery of Equipment, F.O.B. Supplier's plant, warehouse or premises.

c) If unable to deliver, Supplier may charge Customer its customary storage rates and Customer will maintain all-risk property insurance on Equipment, at its replacement value. Supplier will not be liable for deterioration of Equipment, personal property, product resulting from atmospheric conditions, acts of God, or other events regardless of whether they are within Supplier's reasonable control while in Supplier's possession or in transit to Customer's destination or location.

Service Terms

The following are in addition to and a part of all other Terms and Conditions provided for herein.

1) Limited Liability/Disclaimer

a) Supplier will use its best efforts to ensure that all personnel furnished are competent and that Equipment, supplies, personal property or product furnished is in good condition; however, Customer agrees that the Equipment and personnel come without warranty or guarantee of any kind whatsoever except as provided herein.

b) Supplier's personnel will attempt to perform the work requested by Customer; however, because of the nature of the work to be accomplished and because of the unpredictable conditions which always exist, such results as required by Customer or Customer's Customer cannot be and are not guaranteed or warranted and Customer agrees that Supplier makes no warranties of any kind and that Supplier does not guarantee any particular result as from furnishing people, goods, product, personal property, equipment or services.

c) Supplier reserves the right not to do work if, in its sole discretion, job conditions render such action inadvisable for any reason or unsafe for any reason.

d) Customer agrees that any employee(s) furnished by Supplier shall not be responsible for any final decision made on any job. Rather, Customer shall retain complete control and supervision of the job, building site, project and performance of operations in and about the job site.

e) Customer shall pay Supplier for Equipment and Services regardless of whether the desired results are achieved without any deduction or offset of any kind, irrespective of any Claims which Customer may assert or allege against Supplier or any Supplier and/or manufacturer of Equipment and/or Services, at the rates indicated in the Customer's document, manual, delivery documents or Price Book in effect at the time of delivery.

f) Customer will be invoiced at the sales rate or service rates in effect at the beginning of the invoice period.

g) Supplier makes no warranty or representation of any kind, express or implied, as to the quality, performance or function of its people, as to the design, operation, condition or quality of the material or workmanship of equipment or performance of equipment delivered to Customer, it being agreed that all such risks as between Supplier and Customer are to be borne by Customer, regardless of whether such equipment is operated under Supplier's supervision, and all equipment, services and people are accepted by Customer "as is" except as provided elsewhere herein. Customers desiring different standards than those contained herein should, at Customer's expense, obtain an inspection of goods, services, equipment and people prior to use and the benefits of any and all implied warranties of Supplier are hereby waived by Customer except as elsewhere provided herein.

2) Charges

All charges are on a daily basis for a 24-hour day or any part stated therein.

a) Services

i) all Services are on a daily or hourly basis, subject to any minimum charge, all of which are specified by Supplier in Supplier's documents mentioned herein;

ii) charges begin when each Service person departs Supplier's store location where said person or Equipment is based and the charges shall continue until returned to that store;

iii) Customer shall furnish quarters and meals for Supplier's personnel or reimburse Supplier for reasonable living expenses incurred at the prevailing rate from the time each Service person leaves the Supplier's location until return to Supplier's location;

iv) if personnel and/or Equipment are dispatched at Customer's request, but are later canceled, Customer will be invoiced for a "dead call" as provided in the Price Book or other Supplier documents mentioned herein.

b) Standby Charges: Standby rates may be applied under conditions specified in the Price Book.

3) Trade Discount

Trade discounts, if any, apply only to Equipment, goods, or services which are paid for within 30 days of the invoice date. In the event payment is not timely made, with time being deemed to be of the absolute essence, all discounts granted are automatically revoked and reversed on Customer's account and are fully due and owing.

Notes

Product Range Chart

Product range includes but is not limited to the following. Product range is subject to change without notice.

Brand	Type	Size	Class	Ends	Available Material**
Newco	Cast Carbon	* 2" to 48"	150 - 2500	RF, RTJ, BW	WCB, LCC
Newco	Cast Alloy	2" to 24"	150 - 2500	RF, RTJ, BW	C5, WC6, WC9, C12, C12A
Newco	Forged Carbon	1/4" to 3"	150 - 4500	FLGD, THRD, SW	A105N, LF2
Newco	Forged Alloy	1/4" to 2"	150 - 4500	FLGD, THRD, SW	F5, F9, F11, F22, F91, F51
Newco	Pressure Seal	2" to 24"	600 - 4500	RF, RTJ, BW	Cast - all grades
Newco	Floating Ball	1/2" to 18"	150 - 600	RF	WCB, LCC, CF8M
Newco	Sub-Sea	* 1" to 40"	150 - 2500	RTJ, RF, BW, HUB	A105, LF2, LF3, F316, F51, F53, F55
Newco	Trunnion Ball & QuadroSphere	2" to 36"	150 - 2500	RF, BW	A105, LF2, F316, F51
Newco	Trinity Triple Offset	3" to 120"	150 - 600	WFR, LUG, FLGD, BW	WCB, 316, Monel, Hastelloy, NiAlBr
OIC	Cast Stainless	1/2" to 24"	150 - 2500	RF, RTJ, BW	304/L, 316/L, 317/L, 321, 347/H, A20
OIC	Forged Stainless	1/4" to 2"	150 - 4500	FLGD, THRD, SW	304/L, 316/L, 317/L, 321, 347, A20
Cooper	Cast Alloy	1/4" to 24"	150 - 1500	FLGD, THRD, SW, BW	Monel, Inconel, Hastelloy, Titanium, Zirconium, Duplex
Cooper	Forged Alloy	1/4" to 3"	800 - 1500	FLGD, THRD, SW, BW	Monel, Inconel, Hastelloy, Titanium, Zirconium, Duplex
Cooper	Ball Valves	1/4" to 3"	1500 PSI	THRD, SW, BW	Monel, Inconel, Hastelloy, Titanium, Zirconium, Duplex
Cooper	Ball Valves	1/2" to 12"	150 - 1500 PSI	FLGD	Monel, Inconel, Hastelloy, Titanium, Zirconium, Duplex

**Larger sizes available upon request. **Other materials available upon request.*

Company Information

Newmans is recognized as a global valve manufacturing company providing product to the market on a world-wide basis. The NEWCO, OIC, and COOPER trademarks are recognized and respected the world over for their high quality and ability to meet the industry's most exacting standards. Newmans manufactures and markets one of the industry's broadest product lines suitable for most applications and market segments. Newmans is fully committed to being the "Reliable Valve Source to its customer base by quoting on time, delivering on time a quality product at a competitive price. In support we have a highly qualified technical engineering staff, superior customer service backed by large inventories of finished valves which can be shipped daily from seven strategically located distribution centers around the world.

Product Technology

Newmans manufactures Gate, Globe, Check, Stop Check, Tilting Disc, Floating Ball, Trunnion Ball, Sub-Sea, QuadroSphere™ Ball, and Trinity Series Triple Offset valves in a full range of materials, valve styles, and pressure classes. Cast carbon steel, low-alloys, and forged valves are manufactured under the NEWCO trademark. 300 series stainless steel and Alloy 20 are produced and marketed under the OIC trademark. Other exotic alloys are manufactured under the Cooper trademark.

Newmans manufactures and stocks valves in sizes from 1/4" to 120" in diameter and in pressure classes from 150 to 4500 lbs. Larger sizes are available on request.

Newmans facilities operate under ISO 9001-2000 & 14001-2004 series registration. All valves are compliant to the industry standards of API, ASTM, and ASME. Inspection and testing is maintained throughout the manufacturing process to verify compliance to these standards as well as any specific customer requirements.

Customer service is further enhanced by complete modification and actuation capabilities. This capability allows Newmans to provide rapid deliveries of special valve requirements to meet the customer's delivery needs.

Mission Statement

It is our goal to be known and respected in the Industry as "The Reliable Valve Source" for our extensive knowledge and superior service. Measured by keeping our word, we will deliver quality products on time at a fair value.

We achieve the above dealing with integrity in an open and flexible environment allowing people access to valuable information to make good and timely decisions. We believe that all this can be accomplished yielding great rewards for all involved while maintaining a balance in life.

Stafford, Texas - Corporate Headquarters
13127 Trinity Dr. - Stafford, Tx 77477
Tel: 281.302.4900 / Fax: 281.302.4801
Toll Free: 800.231.3505

Houston, Texas
3003 SH 225 #120 - Pasadena, TX 77503
Tel: 713.675.8631 / Fax: 713.675.1589

Carson, California
1539 Del Amo Blvd. - Carson, CA 90746
Tel: 310.667.8570 / Fax: 310.878.0355

East Brunswick, New Jersey
19A Cotters Lane - East Brunswick, NJ 08816
Tel: 732.257.0300 / Fax: 732.238.0132

Atlanta, Georgia
3065 Chastain Meadows Pkwy. - Bldg. 200 Ste. 200
Marietta, GA 30066
Tel: 678.278.4000 / Fax: 678.278.4040

Edmonton, Alberta
9555 - 12th Av SW - Edmonton, AB T6X 0C6 - CAN
Tel: 780.464.3500 / Fax: 780.467.0376

Barrie, Ontario
92 Davidson Street - Barrie, Ontario L4M 3S3 - CAN
Tel: 705.737.4216 / Fax: 705.737.5156

Shanghai, China
Suite 702, Jinying Tower A - 1518 Minsheng Road
Pudong, Shanghai CHINA 200135
Tel: ++86.21.61049569 / Fax: ++86.21.61049579

Bergamo, Italy
Piazza Salvo D'Acquisto, 90
Trescore Balneario (BG) 24069 - Italy
Tel: ++39.035.944914 / Fax: ++39.035.4271247

Melbourne, Australia
8-10 Apoinga Street
Dandenong, Victoria 3175
Tel: ++61.039.7683444 / Fax: ++61.039.7683456

Brisbane, Australia
3/36 Premier Circuit
Warana - Queensland, 4575
Tel: 07.5445.6599 / Fax: 07.5493.5855